! " # $ % & CANEC26026462924 ' (& 2026) 09 * 29 ' + 1 , - . 7 ,

15

COB LED

SGS GZP26-029299

2026 09 14

2026 09 14 ~ 2026 09 22

RoHS 2011/65/EU II (EU) 2015/863- (PBB) (PBDE) (2-) (DEHP) (BBP) (DBP) (DIBP)	

Scan to see the report

Arsene Ye

Unless otherwise agreed in writing, this document is issued by the Company subject to its General Conditions of Service printed overleaf, available on request or accessible at https://www.sgs.com/

! " # $ % & CANEC26026462924 ' (& 2026) 09 * 29 ' + 2 , - . 7 ,

! / 0 &

:

		SGS ID	
SN1	A31	CAN26-0264629-0001.C031	/ / /
SN2	A32	CAN26-0264629-0001.C032	, &

1 2 &

(1) 1 mg/kg = 1 ppm = 0.0001%
(2) MDL= 3 4 5 6
(3) ND = 7 5 (< MDL)
(4) "-" = 7 8 9

RoHS 2011/65/EU II (EU) 2015/863- (PBB) (PBDE) (2-) (DEHP) (BBP) (DBP) (DIBP)

IEC 62321-4:2013+AMD1:2017 IEC 62321-5:2013 IEC 62321-7-2:2017 IEC 62321-12:2023 ICP-OES/AAS UV-Vis GC-MS

			MDL	A31	A32
(Pb)	1000	mg/kg	2	ND	ND
(Hg)	1000	mg/kg	2	ND	ND
(Cd)	100	mg/kg	2	ND	ND
(Cr(VI))	1000	mg/kg	8	ND	ND
(PBB)	1000	mg/kg	-	ND	ND
(MonoBB)	-	mg/kg	25	ND	ND
(DiBB)	-	mg/kg	25	ND	ND
(TriBB)	-	mg/kg	25	ND	ND
(TetraBB)	-	mg/kg	25	ND	ND
(PentaBB)	-	mg/kg	25	ND	ND
(HexaBB)	-	mg/kg	25	ND	ND
(HeptaBB)	-	mg/kg	25	ND	ND
(OctaBB)	-	mg/kg	25	ND	ND
(NonaBB)	-	mg/kg	25	ND	ND
(DecaBB)	-	mg/kg	25	ND	ND
(PBDE)	1000	mg/kg	-	ND	ND
(MonoBDE)	-	mg/kg	25	ND	ND
(DiBDE)	-	mg/kg	25	ND	ND
(TriBDE)	-	mg/kg	25	ND	ND
(TetraBDE)	-	mg/kg	25	ND	ND
(PentaBDE)	-	mg/kg	25	ND	ND
(HexaBDE)	-	mg/kg	25	ND	ND

Unless otherwise agreed in writing, this document is issued by the Company subject to its General Conditions of Service printed overleaf, available on request or accessible at https://www.sgs.com/en/Terms-and-Conditions. Attention is drawn to the limitation of liability

! " # $ % & CANEC26026462924 ' (& 2026) 09 * 29 ' + 3 , - . 7 ,

			MDL	A31	A32
(HeptaBDE)	-	mg/kg	25	ND	ND
(OctaBDE)	-	mg/kg	25	ND	ND
(NonaBDE)	-	mg/kg	25	ND	ND
(DecaBDE)	-	mg/kg	25	ND	ND
(2-) (DEHP)	1000	mg/kg	50	ND	ND
(BBP)	1000	mg/kg	50	ND	ND
(DBP)	1000	mg/kg	50	ND	ND
(DIBP)	1000	mg/kg	50	ND	ND

(1) RoHS (EU) 2015/863
(2) IEC 62321 EN 62321
(3) 2021 7 22 DEHP BBP DBP DIBP

ILAC-G8:09/2019 *w*=0

Unless otherwise agreed in writing, this document is issued by the Company subject to its General Conditions of Service printed overleaf, available on request or accessible at https://www.sgs.com/en/Terms-and-Conditions. Attention is drawn to the limitation of liability

! " # $ % & CANEC26026462924 ' (& 2026) 09 * 29 ' + 4 , - . 7 , : ;

< = ! > ? @

A B C D Pb/Cd/Hg E F G H > ? I J K L M N

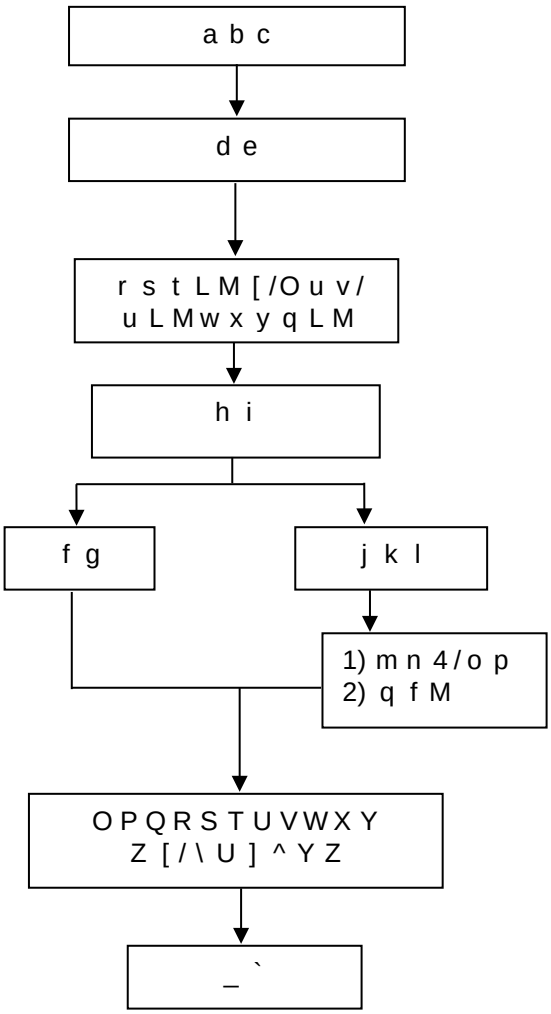

Unless otherwise agreed in writing, this document is issued by the Company subject to its General Conditions of Service printed overleaf, available on request or accessible at https://www.sgs.com/en/Terms-and-Conditions. Attention is drawn to the limitations of liability

! " # $ % & CANEC26026462924 ' (& 2026) 09 * 29 ' + 5 , - . 7 , : ;

z { | ! > ? @

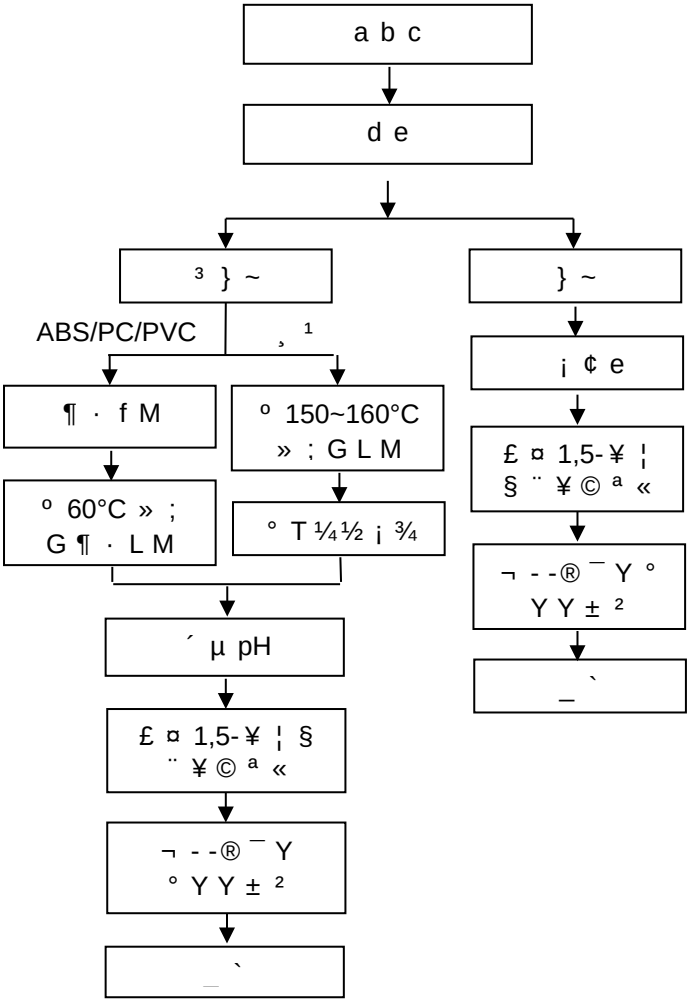

Unless otherwise agreed in writing, this document is issued by the Company subject to its General Conditions of Service printed overleaf, available on request or accessible at https://www.sgs.com/en/Terms-and-Conditions. Attention is drawn to the limitation of liability

! " # $ % & CANEC26026462924 ' (& 2026) 09 * 29 ' + 6 , - . 7 , : ;

PBB(s)/PBDE(s)/Phthalates ! > ? @

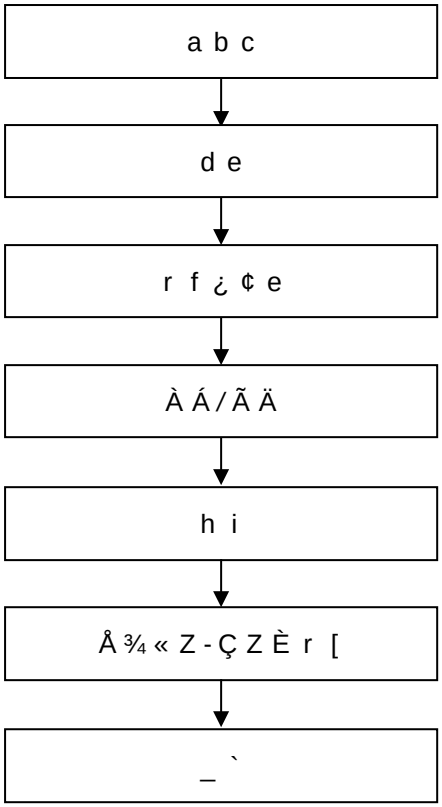

Unless otherwise agreed in writing, this document is issued by the Company subject to its General Conditions of Service printed overleaf, available on request or accessible at https://www.sgs.com/en/Terms-and-Conditions. Attention is drawn to the limitation of liability

CAN26-0264629-0001.C031

CAN26-0264629-0001.C032

SGS

*** " # / É ***

Unless otherwise agreed in writing, this document is issued by the Company subject to its General Conditions of Service printed overleaf, available on request or accessible at https://www.sgs.com/en/Terms-and-Conditions. Attention is drawn to the limitation of liability